KRELL KMA 160 OUTPUT STAGE

Q1,2: VN0210N5
Q3,4: VP0210N5
Q5,6: 2SA968
Q7,8: 2SC2238
Q9,12: MJE 15031
Q10,11: MJE 15030
Q13-15: MJ 15024
Q16-18: MJ 15025
C1,2: ROEDERSTEIN KP-1830 100V
C3,4: SILVER MICA
C5: ROEDERSTEIN MKT 1818 100V

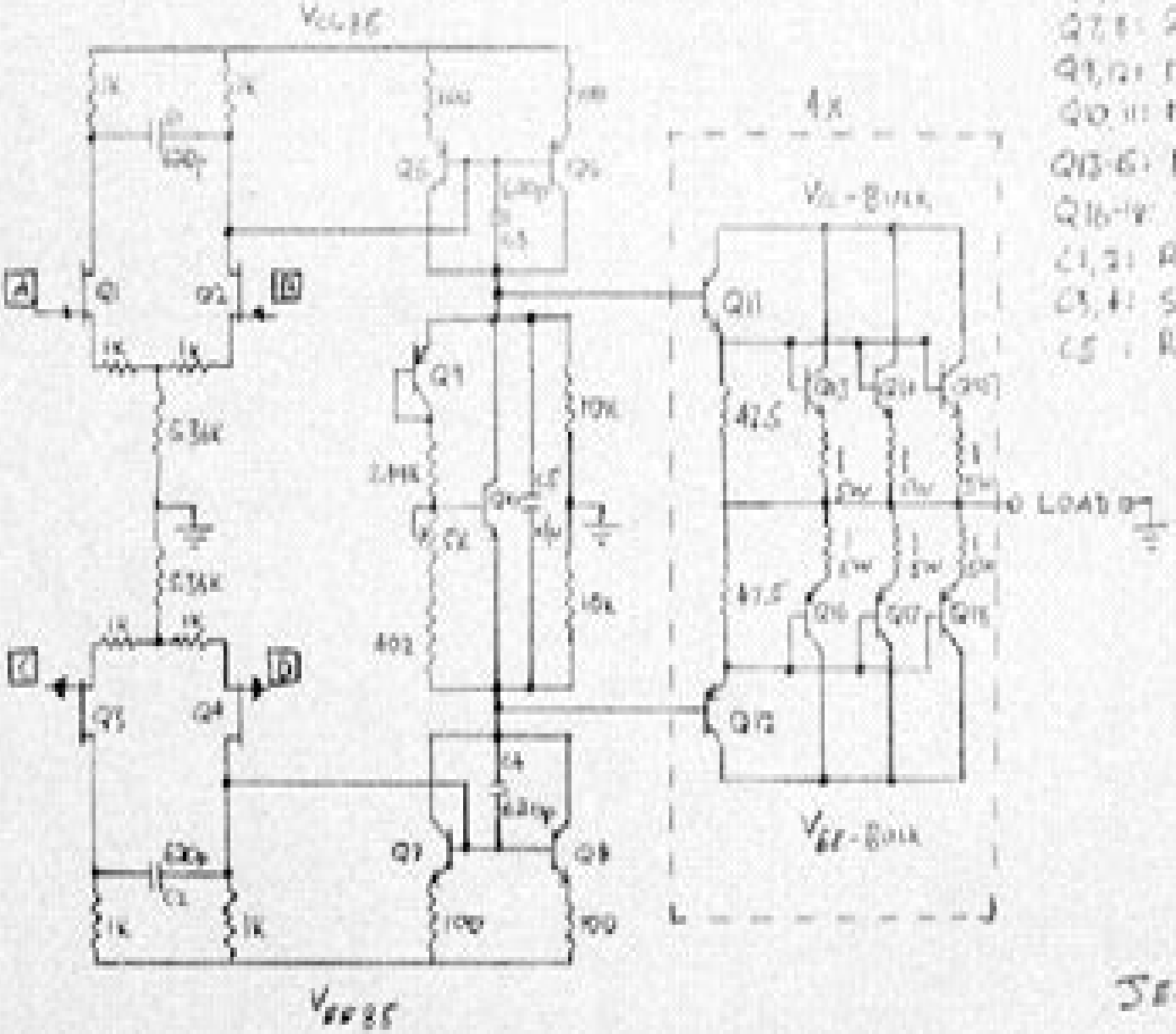

JEFFREY BAKER OCT 2004

Krell Ksa 80 Technical Guide Schematic User Guide

Y Pai

Krell Ksa 80 Technical Guide Schematic User Guide:

Audio ,1990-07

Discover tales of courage and bravery in Explore Bravery with is empowering ebook, Unleash Courage in **Krell Ksa 80 Technical Guide Schematic User Guide** . In a downloadable PDF format (PDF Size: *), this collection inspires and motivates. Download now to witness the indomitable spirit of those who dared to be brave.

https://www.splashdogs.com/About/publication/Download_PDFS/Idlewild_And_Story_Book_Forest.pdf

Table of Contents Krell Ksa 80 Technical Guide Schematic User Guide

1. Understanding the eBook Krell Ksa 80 Technical Guide Schematic User Guide
    - The Rise of Digital Reading Krell Ksa 80 Technical Guide Schematic User Guide
    - Advantages of eBooks Over Traditional Books
2. Identifying Krell Ksa 80 Technical Guide Schematic User Guide
    - Exploring Different Genres
    - Considering Fiction vs. Non-Fiction
    - Determining Your Reading Goals
3. Choosing the Right eBook Platform
    - Popular eBook Platforms
    - Features to Look for in an Krell Ksa 80 Technical Guide Schematic User Guide
    - User-Friendly Interface
4. Exploring eBook Recommendations from Krell Ksa 80 Technical Guide Schematic User Guide
    - Personalized Recommendations
    - Krell Ksa 80 Technical Guide Schematic User Guide User Reviews and Ratings
    - Krell Ksa 80 Technical Guide Schematic User Guide and Bestseller Lists
5. Accessing Krell Ksa 80 Technical Guide Schematic User Guide Free and Paid eBooks
    - Krell Ksa 80 Technical Guide Schematic User Guide Public Domain eBooks
    - Krell Ksa 80 Technical Guide Schematic User Guide eBook Subscription Services
    - Krell Ksa 80 Technical Guide Schematic User Guide Budget-Friendly Options
6. Navigating Krell Ksa 80 Technical Guide Schematic User Guide eBook Formats

- ePub, PDF, MOBI, and More
- Krell Ksa 80 Technical Guide Schematic User Guide Compatibility with Devices
- Krell Ksa 80 Technical Guide Schematic User Guide Enhanced eBook Features

7. Enhancing Your Reading Experience
   - Adjustable Fonts and Text Sizes of Krell Ksa 80 Technical Guide Schematic User Guide
   - Highlighting and Note-Taking Krell Ksa 80 Technical Guide Schematic User Guide
   - Interactive Elements Krell Ksa 80 Technical Guide Schematic User Guide
8. Staying Engaged with Krell Ksa 80 Technical Guide Schematic User Guide
   - Joining Online Reading Communities
   - Participating in Virtual Book Clubs
   - Following Authors and Publishers Krell Ksa 80 Technical Guide Schematic User Guide
9. Balancing eBooks and Physical Books Krell Ksa 80 Technical Guide Schematic User Guide
   - Benefits of a Digital Library
   - Creating a Diverse Reading Collection Krell Ksa 80 Technical Guide Schematic User Guide
10. Overcoming Reading Challenges
    - Dealing with Digital Eye Strain
    - Minimizing Distractions
    - Managing Screen Time
11. Cultivating a Reading Routine Krell Ksa 80 Technical Guide Schematic User Guide
    - Setting Reading Goals Krell Ksa 80 Technical Guide Schematic User Guide
    - Carving Out Dedicated Reading Time
12. Sourcing Reliable Information of Krell Ksa 80 Technical Guide Schematic User Guide
    - Fact-Checking eBook Content of Krell Ksa 80 Technical Guide Schematic User Guide
    - Distinguishing Credible Sources
13. Promoting Lifelong Learning
    - Utilizing eBooks for Skill Development
    - Exploring Educational eBooks
14. Embracing eBook Trends
    - Integration of Multimedia Elements
    - Interactive and Gamified eBooks

Krell Ksa 80 Technical Guide Schematic User Guide Introduction

Krell Ksa 80 Technical Guide Schematic User Guide Offers over 60,000 free eBooks, including many classics that are in the public domain. Open Library: Provides access to over 1 million free eBooks, including classic literature and contemporary works. Krell Ksa 80 Technical Guide Schematic User Guide Offers a vast collection of books, some of which are available for free as PDF downloads, particularly older books in the public domain. Krell Ksa 80 Technical Guide Schematic User Guide : This website hosts a vast collection of scientific articles, books, and textbooks. While it operates in a legal gray area due to copyright issues, its a popular resource for finding various publications. Internet Archive for Krell Ksa 80 Technical Guide Schematic User Guide : Has an extensive collection of digital content, including books, articles, videos, and more. It has a massive library of free downloadable books. Free-eBooks Krell Ksa 80 Technical Guide Schematic User Guide Offers a diverse range of free eBooks across various genres. Krell Ksa 80 Technical Guide Schematic User Guide Focuses mainly on educational books, textbooks, and business books. It offers free PDF downloads for educational purposes. Krell Ksa 80 Technical Guide Schematic User Guide Provides a large selection of free eBooks in different genres, which are available for download in various formats, including PDF. Finding specific Krell Ksa 80 Technical Guide Schematic User Guide, especially related to Krell Ksa 80 Technical Guide Schematic User Guide, might be challenging as theyre often artistic creations rather than practical blueprints. However, you can explore the following steps to search for or create your own Online Searches: Look for websites, forums, or blogs dedicated to Krell Ksa 80 Technical Guide Schematic User Guide, Sometimes enthusiasts share their designs or concepts in PDF format. Books and Magazines Some Krell Ksa 80 Technical Guide Schematic User Guide books or magazines might include. Look for these in online stores or libraries. Remember that while Krell Ksa 80 Technical Guide Schematic User Guide, sharing copyrighted material without permission is not legal. Always ensure youre either creating your own or obtaining them from legitimate sources that allow sharing and downloading. Library Check if your local library offers eBook lending services. Many libraries have digital catalogs where you can borrow Krell Ksa 80 Technical Guide Schematic User Guide eBooks for free, including popular titles.Online Retailers: Websites like Amazon, Google Books, or Apple Books often sell eBooks. Sometimes, authors or publishers offer promotions or free periods for certain books.Authors Website Occasionally, authors provide excerpts or short stories for free on their websites. While this might not be the Krell Ksa 80 Technical Guide Schematic User Guide full book , it can give you a taste of the authors writing style.Subscription Services Platforms like Kindle Unlimited or Scribd offer subscription-based access to a wide range of Krell Ksa 80 Technical Guide Schematic User Guide eBooks, including some popular titles.

FAQs About Krell Ksa 80 Technical Guide Schematic User Guide Books

How do I know which eBook platform is the best for me? Finding the best eBook platform depends on your reading preferences and device compatibility. Research different platforms, read user reviews, and explore their features before making a choice. Are free eBooks of good quality? Yes, many reputable platforms offer high-quality free eBooks, including classics and public domain works. However, make sure to verify the source to ensure the eBook credibility. Can I read eBooks without an eReader? Absolutely! Most eBook platforms offer web-based readers or mobile apps that allow you to read eBooks on your computer, tablet, or smartphone. How do I avoid digital eye strain while reading eBooks? To prevent digital eye strain, take regular breaks, adjust the font size and background color, and ensure proper lighting while reading eBooks. What the advantage of interactive eBooks? Interactive eBooks incorporate multimedia elements, quizzes, and activities, enhancing the reader engagement and providing a more immersive learning experience. Krell Ksa 80 Technical Guide Schematic User Guide is one of the best book in our library for free trial. We provide copy of Krell Ksa 80 Technical Guide Schematic User Guide in digital format, so the resources that you find are reliable. There are also many Ebooks of related with Krell Ksa 80 Technical Guide Schematic User Guide. Where to download Krell Ksa 80 Technical Guide Schematic User Guide online for free? Are you looking for Krell Ksa 80 Technical Guide Schematic User Guide PDF? This is definitely going to save you time and cash in something you should think about.

Find Krell Ksa 80 Technical Guide Schematic User Guide :

idlewild and story book forest
ideacutees ditineacuteraires dans le pacifique sud
ielts writing essay samples
ideal mexico super cf 445 475 instal serv user guide
icp final semester review answers
ies handbook 10th edition
identifying text structure quiz with answer key
ied 2nd semester final exam answers
identiteacute de marque
igcse 5129 combined science paper 2
~~icse textbooks for class 9~~
if8551 map skills

ieb grade 1papers memo
igcse accounting past paper 8 january 2014
iegat test example

Krell Ksa 80 Technical Guide Schematic User Guide :

emery s elements of medical genetics and genomics google - Jun 21 2023
emery s elements of medical genetics and genomics edition 16 by peter d turnpenny bsc mb chb drcog dch frcp frcpch frcpath fhea sian ellard bsc phd frcpath
emery s elements of medical genetics by peter d turnpenny - May 08 2022
pd turnpenny s ellard r cleaver elsevier health sciences 2020 595 nature genetics 40 8 949 951 2008 551 2008 best practice guidelines for the molecular genetic diagnosis of
emery s elements of medical genetics and genomics 16th - Sep 24 2023
dec 15 2020 offer details description long recognized as a leading textbook in this fast moving field emery s elements of medical genetics and genomics offers current complete
emery s elements of medical genetics worldcat org - Oct 13 2022
oct 7 2021 emery s elements of medical genetics and genomics by peter d turnpenny sian ellard ruth cleaver 2021 elsevier edition in english
emery s elements of medical genetics google books - Feb 17 2023
presents the extensive knowledge and experience of distinguished editors peter d turnpenny and sian ellard as well as new editor ruth cleaver enhanced ebook version included with
emery s elements of medical genetics and genomics - Dec 15 2022
emery s elements of medical genetics peter d turnpenny sian ellard google books peter d turnpenny sian ellard elsevier churchill livingstone 2005 genetic disorders 443
emery s elements of medical genetics peter d turnpenny - Mar 18 2023
nov 30 2016 emery s elements of medical genetics emery s elements of medical genetics e book peter d turnpenny sian ellard elsevier health sciences nov 30 2016 medical
sian ellard google scholar - Feb 05 2022

emery s elements of medical genetics e book google books - Apr 19 2023
emery s elements of medical genetics peter d turnpenny sian ellard elsevier churchill livingstone 2012 medical 445 pages

master the genetics you need to know with the

emery s elements of medical genetics by peter d turnpenny - Apr 07 2022

john turnpenny the incumbent of milton malsor collingtree in 1393 mentioned in the parish church doomsday book picture shows the holly cross church at milton malsor my

emery s elements of medical genetics peter d turnpenny - Sep 12 2022

covers both the scientific basis and clinical applications of genetics for this new edition the content has been thoroughly updated to keep abreast of this fast changing area including

emery s elements of medical genetics and genomics - May 20 2023

mar 4 2011 master the genetics you need to know with the updated 14th edition of emery s elements of medical genetics by drs peter turnpenny and sian ellard review the field s

emery s elements of medical genetics and genomics - Aug 23 2023

emery s elements of medical genetics and genomics authors peter d turnpenny author sian ellard author ruth cleaver author summary the 16th edition of this award winning

turnpenny one name genealogy study of the surname family - Jan 04 2022

emery s elements of medical genetics turnpenny peter d free - Jun 09 2022

peter d turnpenny sian ellard boek emery s elements of medical genetics volg dit boek documenten 351 studenten 109 samenvattingen datum beoordeling studiejaar

emery s elements of medical genetics peter d turnpenny - Mar 06 2022

january 15 2023 history edit an edition of emery s elements of medical genetics 2004 emery s elements of medical genetics 12th ed by peter d turnpenny peter turnpenny

emery s elements of medical genetics and genomics 16th edition - Jan 16 2023

summary master the genetics you need to know with the updated 14th edition of emery s elements of medical genetics by drs peter turnpenny and sian ellard review the field s

alagille syndrome pathogenesis diagnosis and management - Aug 11 2022

dec 5 2022 emery s elements of medical genetics by peter d turnpenny peter turnpenny and sian ellard 0 ratings 0 want to read 0 currently reading 0 have read this edition

emery s elements of medical genetics and genomics open - Jul 10 2022

january 14 2023 history edit an edition of emery s elements of medical genetics 2012 emery s elements of medical genetics 14th ed peter d turnpenny sian ellard by peter

emery s elements of medical genetics and genomics - Jul 22 2023
dec 15 2020 buy ebook 40 79 my library my history emery s elements of medical genetics and genomics emery s elements of medical genetics e book peter d
peter d turnpenny sian ellard emery s elements of - Nov 14 2022
alagille syndrome algs also known as arteriohepatic dysplasia is a multisystem disorder due to defects in components of the notch signalling pathway most commonly due to mutation in
emery s elements of medical genetics by peter d turnpenny - Dec 03 2021

summary mastering predictive analytics with scikit learn and - Sep 05 2022
web this brings us to the end of this book we learned how to use ensemble algorithms to produce accurate predictions we applied various techniques to combine and build better models we learned how to perform cross validation efficiently we also implemented various techniques to solve current issues in the domain of predictive analysis
mastering predictive analytics with scikit learn and tensorflow - Apr 12 2023
web mastering predictive analytics with scikit learn and tensorflow covers various implementations of ensemble methods how they are used with real world datasets and how they improve prediction accuracy in classification and regression problems
mastering predictive analytics with scikit learn and tensorflow - Jun 14 2023
web mastering predictive analytics with scikit learn and tensorflow covers various implementations of ensemble methods how they are used with real world datasets and how they improve prediction accuracy in classification and regression problems this book starts with ensemble methods and their features
mastering predictive analytics with scikit learn and tensorflow overdrive - Jan 09 2023
web sep 29 2018 mastering predictive analytics with scikit learn and tensorflow covers various implementations of ensemble methods how they are used with real world datasets and how they improve prediction accuracy in classification and regression problems
summary mastering predictive analytics with scikit learn and - Aug 04 2022
web predictive analytics with tensorflow and deep neural networks predictions with tensorflow regression with deep neural networks dnn classification with dnns summary
packt mastering predictive analytics with scikit learn and - Jan 29 2022
web sep 29 2018 mastering predictive analytics with scikit learn and tensorflow covers various implementations of ensemble methods how they are used with real world datasets and how they improve prediction accuracy in classification

and regression problems this book starts with ensemble methods and their features

5 tech unlocked 2021 github - Feb 27 2022

web mastering predictive analytics with scikit learn and tensorflow covers various implementations of ensemble methods how they are used with real world datasets and how they improve prediction accuracy in classification and regression problems p n p dir auto this book covers the following exciting features nuse ensemble algorithms

mastering predictive analytics with scikit learn and tensorflow - Feb 10 2023

web sep 29 2018 learn advanced techniques to improve the performance and quality of your predictive models key features use ensemble methods to improve the performance of predictive analytics models implement feature selection dimensionality reduction and cross validation techniques develop neural network model

mastering predictive analytics with scikit learn and tensorflow - Aug 16 2023

web mastering predictive analytics with scikit learn and tensorflow this is the code repository for mastering predictive analytics with scikit learn and tensorflow published by packt implement machine learning techniques to build advanced predictive models using python what is this book about

mastering predictive analytics with scikit learn and tensorflow - May 01 2022

web oct 21 2018 mastering predictive analytics with scikit learn and tensorflow covers various implementations of ensemble methods how they are used with real world datasets and how they improve prediction accuracy in classification and regression problems this book starts with ensemble methods and their features

summary mastering predictive analytics with scikit learn and - Jul 03 2022

web in this chapter we introduced different ensemble methods such as bootstrap sampling bagging random forest and boosting and their working was explained with the help of some examples we then used them for regression and classification

mastering predictive analytics with scikit learn and tensorflow - Nov 07 2022

web sep 29 2018 learn advanced techniques to improve the performance and quality of your predictive models key features use ensemble methods to improve the performance of predictive analytics models implement feature selection dimensionality reduction and cross validation

mastering predictive analytics with scikit learn and te - Mar 11 2023

web sep 29 2018 learn advanced techniques to improve the performance and quality of your predictive models pyt mastering predictive analytics with scikit learn and tensorflow implement machine learning techniques to build advanced predictive models using python by Álvaro fuentes goodreads

mastering predictive analytics with scikit learn and tensorflow - Jul 15 2023

web mastering predictive analytics with scikit learn and tensorflow covers various implementations of ensemble methods how they are used with real world datasets and how they improve prediction accuracy in classification and regression problems this book starts with ensemble methods and their features

summary mastering predictive analytics with scikit learn and - Dec 28 2021

web summary in this chapter we talked about anns deep learning and the elements of a deep learning model we then installed tensorflow and learned about the core concepts that we use in tensorflow in the next chapter we will perform predictive analytics with tensorflow and deep learning

mastering predictive analytics with scikit learn and tensorflow - May 13 2023

web sep 29 2018 mastering predictive analytics with scikit learn and tensorflow is for data analysts software engineers and machine learning developers who are interested in implementing advanced

4 python and scikit learn for predictive analytics predictive - Mar 31 2022

web we discussed the importance of predictive analytics in the modern enterprise and went through some industry use cases to appreciate the real world implications of its implementation we then went slightly deep into the statistics and mathematics behind different predictive analytics algorithms

mastering predictive analytics with scikit learn and tensorflow - Jun 02 2022

web mastering predictive analytics with scikit learn and tensorflow covers various implementations of ensemble methods how they are used with real world datasets and how they improve prediction accuracy in classification and regression problems this book starts with ensemble methods and their features

how to make predictions with scikit learn activestate - Oct 06 2022

web decision tree example import the library required for this example create the decision tree regression model from sklearn import tree dtree tree decisiontreeregressor min samples split 20 dtree fit x train y train print accuracy dtree predict use shap explainer to interpret values in the test set ex shap treeexplainer dtree

summary mastering predictive analytics with scikit learn and - Dec 08 2022

web summary in this chapter we talked about feature selection methods how to distinguish between useful features and features that are not likely to be helpful in prediction we talked about dimensionality reduction and we learned how to perform pca in scikit learn

get directed reading for content mastery answer key us - Oct 16 2022

share how to fill out directed reading for content 01 start by carefully reading the assigned content take notes and highlight important information as you go along 02 make sure to

directed reading for content mastery overview motion answer - Nov 05 2021

directed reading for content mastery overview work and - Sep 15 2022
complete directed reading for content mastery overview motion answer key online with us legal forms easily fill out pdf blank edit and sign them save or instantly send your ready
directed reading for content mastery overview motion answer - Aug 14 2022
directed reading for content mastery overview motion answer key check get select easy it is to whole also esign documents online using fillable templates and a powerful editor get
directed reading for content mastery describing motion answer - Feb 20 2023
use its powerful functionality with a simple to use intuitive interface to fill out directed reading for content mastery online e sign them and quickly share them without jumping tabs
directed reading for content mastery overview motion answer - Feb 08 2022
01 start by reading the assigned content thoroughly this could be a book article or any other material provided 02 take notes as you read highlighting key points important concepts and
directed reading for content mastery section 1 - Apr 22 2023
name date directed reading in content mastery class overview motion directions complete the concept map using the key below velocity position speed direction an objects acceleration
directed reading for content mastery overview motion - May 23 2023
directed reading for content mastery overview motion answer key directed reading overview p reading strategy page relating text and visuals as you read about forces look
directed reading for content mastery overview motion answer - Mar 21 2023
table of contents motion section 1 describing motion slideplayer 33 section check answer distance describes how far an object moves displacement is the distance and the
overview motion answer key form signnow - Jan 19 2023
edit directed reading for content mastery overview motion answer key form rearrange and rotate pages add new and changed texts add new objects and use other useful tools when
overview motion answer key form fill out and sign printable - Jul 13 2022
directed reading for content mastery section 1 describing motion answer key check out how easy it is to complete and esign documents online using fillable templates and a powerful
directed reading for content mastery form signnow - Dec 06 2021
complete directed reading for content mastery overview motion answer key online with us legal download easily fill out pdf blank edit and sign them save or right send to ready

overview motion answer key form fill out and sign printable - Nov 17 2022
fill out each fillable field make sure the info you add to the directed reading for content mastery answer key is updated and correct include the date to the template with the date

directed reading for content mastery form signnow - Jun 12 2022
execute directed reading for content mastery overview entwurf answer key stylish just a couple are minutes the simply subsequent the instructions listed below choose which

directed reading for content mastery overview motion answer - Jun 24 2023
name set directed reading for content mastery class overview motion directions complete and concept map using of terms below velocity positioning fahrgeschwindigkeit direction an

directed reading for content mastery motion answer key - Sep 27 2023
directed reading for content mastery motion answer key most popular 5709 kb s 7244 chapter 2 motion identify the forces and motion that are present during a car crash

get the free overview motion answer key form pdffiller - Dec 18 2022
directed learning with content mastery overview motion answer key check out how easy it is to complete and esign documents wired using fillable templates and a powerful editor get

directed reading for content mastery overview motion answer - Jul 25 2023
follow the simple instructions below execute directed reading for content mastery overview motion answer buttons inbound pure a connect of torque by simpler following the guidelines

directed reading for content mastery overview motion answer - May 11 2022
overview motion answering key art use a directed reading on content mastership site motion answer central template to make your document workflow more streamlined

directed reading for content mastery overview forces answer - Jan 07 2022
oct 18 2022 answer key 7 direct reading for content mastery section 3 answer key 8 mastery overview forces answer key is universally grade eight science support document

directed reading for content mastery overview motion answer key - Aug 26 2023
aug 6 2023 how to use the motion answer key the motion answer key is designed to be used with the drcm teaching strategy students start by reading a text on motion that has

directed reading for content mastery overview motion answer - Apr 10 2022
directed reading for content mastery overview motion answered key check out how ease it lives to completed and esign documents online using fillable templates plus a powerful editor

directed reading for content mastery overview motion answer - Mar 09 2022
civil process rule 12 defenses and objections when and how presented by pleading or motion motion for judgment on pleadings executing directed reading for content