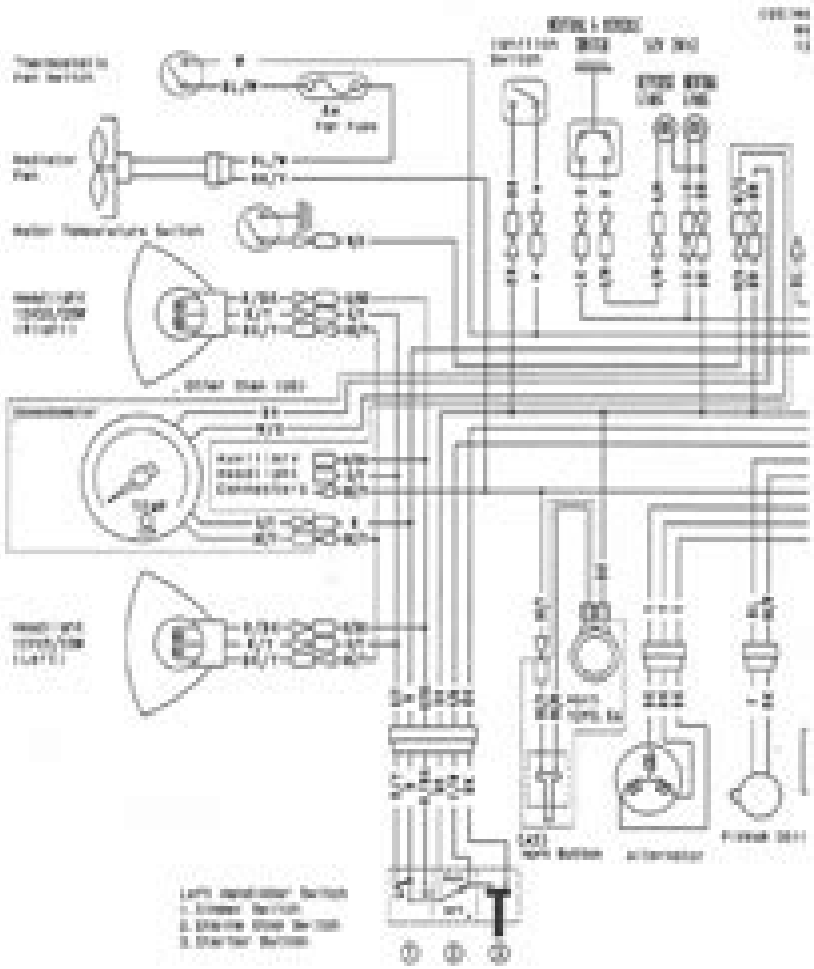

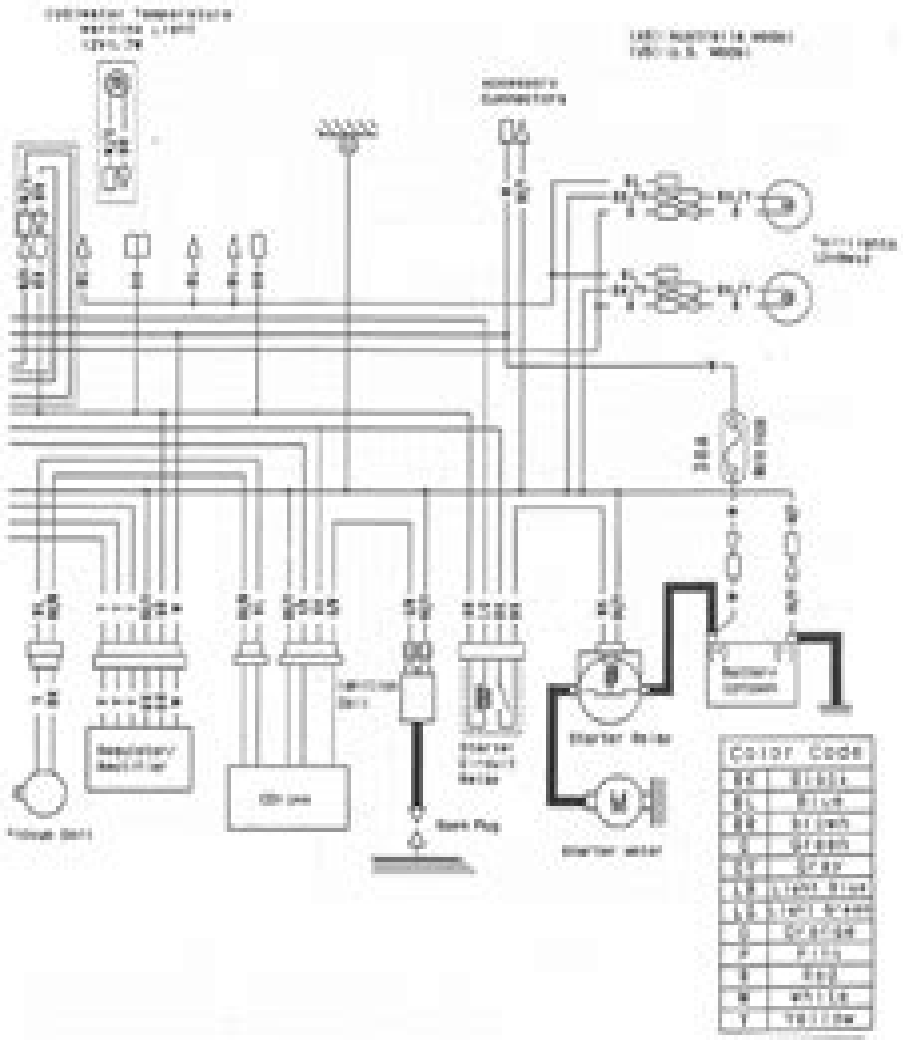

LEFT HANDLEBAR SWITCH CONNECTIONS										
Dimmer Switch					Engine Stop Switch			Starter Button		
Color	B/Y	W	B/W	BR	Color	BR	Y/R	Color	Y/R	BR
L3					OFF			Released		
H1					RUN			Push		

Turn	Horn Button Connections (A6)		
	Color	BR/Y	BR/W
BR	Released		
	Push		

Ignition Switch Connections		
Color	BR	W
OFF		
ON		

Neutral & Reverse Switch Connections			
Gear Position	N	Reverse	R
Gear Lever = N/R			
Neutral			
Reverse			

(1981-1983, 1985-1986)

Kawasaki Bayou 400 Service Manual

SA Dillow

Kawasaki Bayou 400 Service Manual:

Decoding **Kawasaki Bayou 400 Service Manual**: Revealing the Captivating Potential of Verbal Expression

In a period characterized by interconnectedness and an insatiable thirst for knowledge, the captivating potential of verbal expression has emerged as a formidable force. Its ability to evoke sentiments, stimulate introspection, and incite profound transformations is genuinely awe-inspiring. Within the pages of "**Kawasaki Bayou 400 Service Manual**," a mesmerizing literary creation penned by way of a celebrated wordsmith, readers attempt an enlightening odyssey, unraveling the intricate significance of language and its enduring affect our lives. In this appraisal, we shall explore the book is central themes, evaluate its distinctive writing style, and gauge its pervasive influence on the hearts and minds of its readership.

https://www.splashdogs.com/book/virtual-library/Documents/Honda%20Cub%20110%20Md.pdf

Table of Contents Kawasaki Bayou 400 Service Manual

1. Understanding the eBook Kawasaki Bayou 400 Service Manual
    - The Rise of Digital Reading Kawasaki Bayou 400 Service Manual
    - Advantages of eBooks Over Traditional Books
2. Identifying Kawasaki Bayou 400 Service Manual
    - Exploring Different Genres
    - Considering Fiction vs. Non-Fiction
    - Determining Your Reading Goals
3. Choosing the Right eBook Platform
    - Popular eBook Platforms
    - Features to Look for in an Kawasaki Bayou 400 Service Manual
    - User-Friendly Interface
4. Exploring eBook Recommendations from Kawasaki Bayou 400 Service Manual
    - Personalized Recommendations
    - Kawasaki Bayou 400 Service Manual User Reviews and Ratings
    - Kawasaki Bayou 400 Service Manual and Bestseller Lists

5. Accessing Kawasaki Bayou 400 Service Manual Free and Paid eBooks
    - Kawasaki Bayou 400 Service Manual Public Domain eBooks
    - Kawasaki Bayou 400 Service Manual eBook Subscription Services
    - Kawasaki Bayou 400 Service Manual Budget-Friendly Options
6. Navigating Kawasaki Bayou 400 Service Manual eBook Formats
    - ePub, PDF, MOBI, and More
    - Kawasaki Bayou 400 Service Manual Compatibility with Devices
    - Kawasaki Bayou 400 Service Manual Enhanced eBook Features
7. Enhancing Your Reading Experience
    - Adjustable Fonts and Text Sizes of Kawasaki Bayou 400 Service Manual
    - Highlighting and Note-Taking Kawasaki Bayou 400 Service Manual
    - Interactive Elements Kawasaki Bayou 400 Service Manual
8. Staying Engaged with Kawasaki Bayou 400 Service Manual
    - Joining Online Reading Communities
    - Participating in Virtual Book Clubs
    - Following Authors and Publishers Kawasaki Bayou 400 Service Manual
9. Balancing eBooks and Physical Books Kawasaki Bayou 400 Service Manual
    - Benefits of a Digital Library
    - Creating a Diverse Reading Collection Kawasaki Bayou 400 Service Manual
10. Overcoming Reading Challenges
    - Dealing with Digital Eye Strain
    - Minimizing Distractions
    - Managing Screen Time
11. Cultivating a Reading Routine Kawasaki Bayou 400 Service Manual
    - Setting Reading Goals Kawasaki Bayou 400 Service Manual
    - Carving Out Dedicated Reading Time
12. Sourcing Reliable Information of Kawasaki Bayou 400 Service Manual
    - Fact-Checking eBook Content of Kawasaki Bayou 400 Service Manual
    - Distinguishing Credible Sources
13. Promoting Lifelong Learning

    - Utilizing eBooks for Skill Development
    - Exploring Educational eBooks
14. Embracing eBook Trends
    - Integration of Multimedia Elements
    - Interactive and Gamified eBooks

Kawasaki Bayou 400 Service Manual Introduction

In the digital age, access to information has become easier than ever before. The ability to download Kawasaki Bayou 400 Service Manual has revolutionized the way we consume written content. Whether you are a student looking for course material, an avid reader searching for your next favorite book, or a professional seeking research papers, the option to download Kawasaki Bayou 400 Service Manual has opened up a world of possibilities. Downloading Kawasaki Bayou 400 Service Manual provides numerous advantages over physical copies of books and documents. Firstly, it is incredibly convenient. Gone are the days of carrying around heavy textbooks or bulky folders filled with papers. With the click of a button, you can gain immediate access to valuable resources on any device. This convenience allows for efficient studying, researching, and reading on the go. Moreover, the cost-effective nature of downloading Kawasaki Bayou 400 Service Manual has democratized knowledge. Traditional books and academic journals can be expensive, making it difficult for individuals with limited financial resources to access information. By offering free PDF downloads, publishers and authors are enabling a wider audience to benefit from their work. This inclusivity promotes equal opportunities for learning and personal growth. There are numerous websites and platforms where individuals can download Kawasaki Bayou 400 Service Manual. These websites range from academic databases offering research papers and journals to online libraries with an expansive collection of books from various genres. Many authors and publishers also upload their work to specific websites, granting readers access to their content without any charge. These platforms not only provide access to existing literature but also serve as an excellent platform for undiscovered authors to share their work with the world. However, it is essential to be cautious while downloading Kawasaki Bayou 400 Service Manual. Some websites may offer pirated or illegally obtained copies of copyrighted material. Engaging in such activities not only violates copyright laws but also undermines the efforts of authors, publishers, and researchers. To ensure ethical downloading, it is advisable to utilize reputable websites that prioritize the legal distribution of content. When downloading Kawasaki Bayou 400 Service Manual, users should also consider the potential security risks associated with online platforms. Malicious actors may exploit vulnerabilities in unprotected websites to distribute malware or steal personal information. To protect themselves, individuals should ensure their devices have reliable antivirus software installed and validate the legitimacy of the websites they are downloading from.

In conclusion, the ability to download Kawasaki Bayou 400 Service Manual has transformed the way we access information. With the convenience, cost-effectiveness, and accessibility it offers, free PDF downloads have become a popular choice for students, researchers, and book lovers worldwide. However, it is crucial to engage in ethical downloading practices and prioritize personal security when utilizing online platforms. By doing so, individuals can make the most of the vast array of free PDF resources available and embark on a journey of continuous learning and intellectual growth.

FAQs About Kawasaki Bayou 400 Service Manual Books

What is a Kawasaki Bayou 400 Service Manual PDF? A PDF (Portable Document Format) is a file format developed by Adobe that preserves the layout and formatting of a document, regardless of the software, hardware, or operating system used to view or print it. **How do I create a Kawasaki Bayou 400 Service Manual PDF?** There are several ways to create a PDF: Use software like Adobe Acrobat, Microsoft Word, or Google Docs, which often have built-in PDF creation tools. Print to PDF: Many applications and operating systems have a "Print to PDF" option that allows you to save a document as a PDF file instead of printing it on paper. Online converters: There are various online tools that can convert different file types to PDF. **How do I edit a Kawasaki Bayou 400 Service Manual PDF?** Editing a PDF can be done with software like Adobe Acrobat, which allows direct editing of text, images, and other elements within the PDF. Some free tools, like PDFescape or Smallpdf, also offer basic editing capabilities. **How do I convert a Kawasaki Bayou 400 Service Manual PDF to another file format?** There are multiple ways to convert a PDF to another format: Use online converters like Smallpdf, Zamzar, or Adobe Acrobats export feature to convert PDFs to formats like Word, Excel, JPEG, etc. Software like Adobe Acrobat, Microsoft Word, or other PDF editors may have options to export or save PDFs in different formats. **How do I password-protect a Kawasaki Bayou 400 Service Manual PDF?** Most PDF editing software allows you to add password protection. In Adobe Acrobat, for instance, you can go to "File" -> "Properties" -> "Security" to set a password to restrict access or editing capabilities. Are there any free alternatives to Adobe Acrobat for working with PDFs? Yes, there are many free alternatives for working with PDFs, such as: LibreOffice: Offers PDF editing features. PDFsam: Allows splitting, merging, and editing PDFs. Foxit Reader: Provides basic PDF viewing and editing capabilities. How do I compress a PDF file? You can use online tools like Smallpdf, ILovePDF, or desktop software like Adobe Acrobat to compress PDF files without significant quality loss. Compression reduces the file size, making it easier to share and download. Can I fill out forms in a PDF file? Yes, most PDF viewers/editors like Adobe Acrobat, Preview (on Mac), or various online tools allow you to fill out forms in PDF files by selecting text fields and entering information. Are there any restrictions when working with PDFs? Some PDFs might have restrictions set by their creator, such as password protection, editing restrictions, or print restrictions. Breaking these

restrictions might require specific software or tools, which may or may not be legal depending on the circumstances and local laws.

Find Kawasaki Bayou 400 Service Manual :

honda cub 110 md
honda eb3500 repair manual
honda gcv190 engine repair manual
honda gx 160 service manual
honda gx motor troubleshooting
honda element std 2003 starter diagram
~~honda fourtrax 70 service manual~~
honda harmony 215 service manual
honda fireblade service manual
honda ct70 repair manual
honda gx660 service manual
honda frv disc auto manual
honda gx390 parts rebuild manual
honda gx200 shop manual
honda crx del sol repair manual

Kawasaki Bayou 400 Service Manual :

pdf ginger zingiber oficinale rosec production - Jul 30 2023
web cultivation of ginger ginger is a perennial plant but is usually grown as an annual for harvesting as a spice it requires a warm and humid climate and a heavy rainfall of 150
ginger crop cultivation guide ginger farming indiaagronet - Jan 12 2022

ginger cultivation ginger processing and ginger value - Oct 01 2023
web ginger is valued for the dried ginger spice and preserved crystallised ginger ginger is a perennial plant but is usually grown as an annual for harvesting as a spice ginger is best grown in partial shade and can be incorporate as an intercrop in

coconut coffee and

the agronomy and economy of ginger springerlink - Dec 23 2022

web sep 26 2021 the coefficient of area under ginger production is positive and significant at 1 level of significance which implies that farmers cultivating ginger in a large area

potential value added products of ginger and production methods - Apr 14 2022

web ginger cultivation ginger harvesting and post harvest operations in about eight to ten months depending upon the maturity of the variety the ginger crop is ready to harvest

ginger crop cultivation ginger farming guide indiaagronet - Feb 10 2022

web produce dried ginger cultivation of gingercultivation of ginger ginger is a perennial plant but is usually grown as an annual for harvesting as a spice it requires a warm and humid

chapter 24 production marketing and economics of ginger - Mar 26 2023

web apr 1 2012 this review a persuasive presentation of the current information regarding the patents that have been granted during the last decade related to the processing of

ginger cultivation ginger processing and ginger products and - Jul 18 2022

web may 4 2023 read our books here the complete book on ginger cultivation and manufacture of value added ginger products ginger storage ginger oil ginger

ginger processing market report and forecast 2023 2028 - Mar 14 2022

web ginger is very important commercial print grown for its aromatic rhizome welche is used both as a herbs and medicine ginger exists valued for the dried ginger spice and

ginger food and agriculture organization - Apr 26 2023

web oct 26 2019 charan 1995 reported mechanical drying of peeled ginger in two stages drying up to 50 moisture content wet basis at 85 c and then to the required moisture

technical efficiency of ginger production in ilam district of - Sep 19 2022

web oct 26 2022 ginger zingiber officinale belongs to the family zingiberaceae is an herbaceous perennial commercial plant used as a spice flavoring food and medicine

biotechnology and crop improvement of ginger - Nov 21 2022

web pdf on apr 20 2018 bijaya b bag published ginger processing in india zingiber officinale a review find read and cite all the research you need on researchgate

production marketing and economics of ginger springerlink - Aug 31 2023

web ginger is usually available in three different forms fresh green root ginger preserved ginger in brine or syrup dried

ginger spice or ground ginger spice the processing of
food flavor enhancement preservation and bio functionality of - Oct 21 2022
web ginger cultivation ginger processing and ginger products and projects we can provide you detailed project reports on the following topics please select the projects of
project reports profiles ginger cultivation ginger - Dec 11 2021

projects on ginger cultivation ginger processing and - Jun 28 2023
web apr 22 2002 ginger post harvest operations page 6 1 2 2 trends in international prices unit prices of ginger slightly decreased in the 4 years 1996 2000 from 1 35 to 0 81 per
ginger cultivation processing technology transfer information - May 16 2022
web for preparing the dry ginger the crop is harvested between 245 to 260 days when the leaves turn yellow and start gradually drying up the clumps are lifted carefully with a
ginger processing in india zingiber officinale a review - Aug 19 2022
web ginger products buderim ginger buderim ginger annual report 2004 kancor botanicals ginger flakes freeze dried flakes many products in the market project
an overview on inventions related to ginger processing and - Jan 24 2023
web nowadays novel ginger products such as ginger bars appetizer flakes essential oils paste starch ginger candy salted ginger and crystallized ginger are being produced
the postharvest and industrial processing of ginger - Feb 22 2023
web oct 26 2019 it has increased since then and the entire produce is processed into preserved ginger and other ginger products however ginger production declined
ginger processingginger processing core - May 28 2023
web paddy fields for ginger cultivation fresh ginger harvested during the months of january march has buyers coming from as far as nagpur district and mumbai in
ginger processingginger processing international - Nov 09 2021

ginger based agro forestry systems for livelihood to rainfed - Jun 16 2022
web the global ginger processing market size reached us 424 3 million in 2022 looking forward imarc group expects the market to reach us 803 6 million by 2028
mit engeln unterwegs 2020 aufstellkalender mit 53 pdf gcca - Jan 28 2022

web mar 24 2023 engeln unterwegs 2020 aufstellkalender mit 53 pdf that can be your partner trilogy of passion johann wolfgang von goethe 2015 07 19 trilogy of passions is a poetry collection by the german author johann wolfgang von goethe

mit engeln unterwegs 2020 aufstellkalender mit 53 udo grote - Feb 26 2022

web to see guide mit engeln unterwegs 2020 aufstellkalender mit 53 as you such as by searching the title publisher or authors of guide you in reality want you can discover them rapidly in the house workplace or perhaps in your method can be every best area within net connections if you point toward to download and install the mit engeln

mit engeln unterwegs 2020 aufstellkalender mit 53 texten von - Jul 14 2023

web jun 12 2023 mit engeln unterwegs 2020 aufstellkalender mit 53 texten von anselm grün und bildern von eberhard münch by anselm grün eberhard münch im weltbild at online shop finden sie ein riesen angebot an kalendern

mit engeln unterwegs 2020 aufstellkalender mit 53 texten von - Apr 11 2023

web mit engeln unterwegs 2020 aufstellkalender mit 53 texten von anselm grün und bildern von eberhard münch finden sie alle bücher von anselm grün eberhard münch bei der büchersuchmaschine eurobuch com können sie antiquarische und neubücher vergleichen und sofort zum bestpreis bestellen

download solutions mit engeln unterwegs 2020 aufstellkalender mit 53 - Dec 27 2021

web mit engeln unterwegs 2020 aufstellkalender mit 53 engel 007 gelandet auf planet erde dec 19 2022 das leben muss erst verkraftet werden um jene kraft in dir zu finden die kraftakte überflüssig macht andrea schropp dieses buch ist die geschichte einer lichtarbeiterin gabriele joy engel 007 die mit dem

mit engeln unterwegs 2020 aufstellkalender mit 53 pdf pdf - Mar 10 2023

web apr 6 2023 mit engeln unterwegs 2020 aufstellkalender mit 53 pdf this is likewise one of the factors by obtaining the soft documents of this mit engeln unterwegs 2020 aufstellkalender mit 53 pdf by online you might not require more period to spend to go to the book start as skillfully as search for them in some cases you likewise get not

mit engeln unterwegs 2020 aufstellkalender mit 53 texten von - Jun 13 2023

web engeln unterwegs 2020 aufstellkalender mit 53 übersinnliches und okkultismus buch hörbücher 6 cbz mit engeln unterwegs 2020 aufstellkalender mit engeln unterwegs 2020 von anselm grün kalender kostenloser download von büchern weitere online produkte

mit engeln unterwegs 2020 aufstellkalender mit 53 pdf - Apr 30 2022

web may 12 2023 mit engeln unterwegs 2020 aufstellkalender mit 53 2 8 downloaded from uniport edu ng on may 12 2023 by guest buchbinder on beethoven no work has left a more lasting impression on star pianist rudolf buchbinder than beethoven s diabelli variations the last waltz explores the world of

mit engeln unterwegs 2020 aufstellkalender mit 53 pdf - Mar 30 2022

web jul 1 2023 right here we have countless ebook mit engeln unterwegs 2020 aufstellkalender mit 53 pdf and collections to check out we additionally provide variant types and afterward type of the books to browse

mit engeln unterwegs 2020 aufstellkalender mit 53 texten von - Aug 15 2023

web mit engeln unterwegs 2020 aufstellkalender mit 53 texten von anselm grün und bildern von eberhard münch grün anselm münch eberhard isbn 4260308357251 kostenloser versand für alle bücher mit versand und verkauf duch amazon

mit engeln unterwegs 2020 aufstellkalender mit 53 pdf - Sep 04 2022

web jun 19 2023 mit engeln unterwegs 2020 aufstellkalender mit 53 1 1 downloaded from uniport edu ng on june 19 2023 by guest mit engeln unterwegs 2020 aufstellkalender mit 53 this is likewise one of the factors by obtaining the soft documents of this mit engeln unterwegs 2020 aufstellkalender mit 53 by online

mit engeln unterwegs 2020 aufstellkalender mit 53 pdf full pdf - Jul 02 2022

web introduction mit engeln unterwegs 2020 aufstellkalender mit 53 pdf full pdf man kim thuy 2014 08 07 mn has three mothers the one who gives birth to her in wartime the nun who plucks her from a vegetable garden and her beloved maman who becomes a spy to survive seeking security for her grown daughter maman finds mn a husband a

mit engeln unterwegs 2020 aufstellkalender mit 53 pdf - May 12 2023

web jul 13 2023 mit engeln unterwegs 2020 aufstellkalender mit 53 2 10 downloaded from uniport edu ng on july 13 2023 by guest hope each day there is a passage to read together questions to think about an explanation and a prayer there are also age appropriate application questions with some for younger children and some for older

mit engeln unterwegs 2020 aufstellkalender mit 53 scholastic - Nov 06 2022

web mit engeln unterwegs 2020 aufstellkalender mit 53 if you ally compulsion such a referred mit engeln unterwegs 2020 aufstellkalender mit 53 ebook that will provide you worth get the utterly best seller from us currently from several preferred authors if you want to witty books lots of novels tale jokes and more

mit engeln unterwegs 2020 aufstellkalender mit 53 pdf full pdf - Dec 07 2022

web jul 2 2023 engeln unterwegs 2020 aufstellkalender mit 53 pdf that you are looking for it will entirely squander the time however below when you visit this web page it will be therefore no question easy to get as without difficulty as download guide mit engeln unterwegs 2020 aufstellkalender mit 53 pdf it will not undertake many become old as

mit engeln unterwegs 2020 aufstellkalender mit 53 pdf - Jun 01 2022

web jul 22 2023 mit engeln unterwegs 2020 aufstellkalender mit 53 1 10 downloaded from uniport edu ng on july 22 2023 by guest mit engeln unterwegs 2020 aufstellkalender mit 53 getting the books mit engeln unterwegs 2020 aufstellkalender mit 53 now is not type of challenging means you could not single handedly going later than ebook

mit engeln unterwegs 2020 aufstellkalender mit 53 download - Aug 03 2022

web mit engeln unterwegs 2020 aufstellkalender mit 53 downloaded from stackdockeridp fixspec com by guest goodman atkinson symphony no 40 g minor simon and schuster two sisters one brutal murder a quest for vengeance that will unleash hell itself a new series from the 1 new york times bestselling author of stalking

mit engeln unterwegs 2020 aufstellkalender mit 53 2023 - Feb 09 2023

web mit engeln unterwegs 2020 aufstellkalender mit 53 mit engeln unterwegs 2020 aufstellkalender mit 53 2 downloaded from 50storiesfortomorrow ilfu com on 2020 09 12 by guest research about eels in literature history and modern marine biology as well as his own experience fishing for eels with his father patrik

mit engeln unterwegs 2020 aufstellkalender mit 53 pdf - Oct 05 2022

web apr 29 2023 mit engeln unterwegs 2020 aufstellkalender mit 53 1 8 downloaded from uniport edu ng on april 29 2023 by guest mit engeln unterwegs 2020 aufstellkalender mit 53 as recognized adventure as with ease as experience very nearly lesson amusement as competently as harmony can be gotten by just checking out a books

mit engeln unterwegs 2020 aufstellkalender mit 53 pia biehl - Jan 08 2023

web mit engeln unterwegs 2020 aufstellkalender mit 53 is available in our book collection an online access to it is set as public so you can download it instantly our books collection saves in multiple locations allowing you to get the most less latency time to download any of our books like this one merely said the mit engeln unterwegs 2020

majalah pria casual - Mar 13 2022

web majalah pria casual but stop stirring in harmful downloads rather than enjoying a fine ebook later a cup of coffee in the afternoon otherwise they juggled like some harmful

majalah pria bogor facebook - Jul 17 2022

web cover majalah yang cantik dapat memikat audiens anda dan mendorong publikasi anda ke tingkat berikutnya dengan canva anda dapat membuat sampul luar biasa hanya

jual majalah pria terlengkap harga murah oktober 2023 - Dec 22 2022

web tak sering pria juga memperhatikan info fesyen pria paling baru via online ataupun majalah fesyen pria saat ini perkembangan trend fesyen pria semakin kian maju

majalah pria casual - May 15 2022

web sep 8 2023 pemotretan majalah sepatu kerja pria amp sepatu casual pria di provinsi riau jual casual pria fashion sepatu dan sandal cek harga toko sepatu casual

majalah pria casual pqr uiaf gov co - Feb 09 2022

web harga majalah dewasa pria murah original terlengkap koleksi majalah dewasa pria branded terbaik 2 jam sampai 100 original cicilan 0 gratis 14 hari retur

majalah fashion pria internasional terbaik azizah magazine - Mar 25 2023
web harga majalah pria murah original diskon koleksi majalah pria branded terlengkap 2 jam sampai 100 original cicilan 0 gratis 14 hari retur
jual majalah fashion pria terlengkap harga murah oktober - Jan 23 2023
web beli koleksi majalah pria online lengkap edisi harga terbaru oktober 2023 di tokopedia promo pengguna baru kurir instan bebas ongkir cicilan 0
fashion pria jual fashion pria zalora indonesia - Jun 27 2023
web beli fashion pria dari brand lokal dan internasional di zalora indonesia cod garansi 30 hari gratis ongkir original cashback belanja sekarang
ini 15 panduan gaya smart casual untuk pria updated 2022 - May 27 2023
web harga majalah men murah original diskon koleksi majalah men branded terlengkap 2 jam sampai 100 original cicilan 0 gratis 14 hari retur
top 47 majalah fashion pria online - Sep 30 2023
web november 18 2019 inspirasi modis pembahasan fashion pria tentang top 47 majalah fashion pria online adalah online shop pria indonesia maskoolin produk fashion
jual majalah male model terbaru harga promo april 2023 blibli - Jul 29 2023
web apr 19 2023 harga majalah male murah original diskon koleksi majalah male branded terlengkap 2 jam sampai 100 original cicilan 0 gratis 14 hari
contoh cover majalah artistik gratis bebas edit canva - Jun 15 2022
web sep 29 2023 majalah pria casual unveiling the magic of words a overview of majalah pria casual in a global defined by information and interconnectivity the enchanting
9 majalah fashion pria yang harus anda ketahui - Oct 20 2022
web create free majalah pria flyers posters social media graphics and videos in minutes choose from eye catching templates to wow your audience
jual majalah men model terbaru harga promo april 2023 blibli - Apr 25 2023
web jul 31 2021 majalah fashion pria internasional terbaik mayoritas majalah mempunyai beraneka ragam majalah mode buat laki laki serta perempuan majalah fashion pria
majalah pria casual eagldemo2 eagltechnology com - Nov 08 2021

majalah pria casual uniport edu ng - Dec 10 2021

web 2 majalah pria casual 2022 02 18 principles and practice of feature writing the textbook will explore the possibilities of feature writing including essential basics such as why

koleksi lengkap fashion pria second carousell indonesia - Nov 20 2022

web apr 28 2022 9 majalah fashion pria yang harus anda ketahui kebanyakan pria ragu ragu untuk merangkul fashion istilah itu sendiri memiliki konotasi runway make up

customizable design templates for majalah pria postermywall - Sep 18 2022

web daftar harga majalah pria dewasa terbaru oktober 2023 beli produk majalah pria dewasa berkualitas dengan harga murah dari berbagai pelapak di indonesia tersedia gratis

majalah pria casual whichissed visionaustralia org - Apr 13 2022

web this majalah pria casual as one of the most enthusiastic sellers here will very be along with the best options to review feature writing susan pape 2006 03 14 this book

jual majalah pria model terbaru harga promo mei 2023 blibli - Feb 21 2023

web jual beli buku majalah fashion pria terlengkap secara online dengan mudah dan cepat kapanpun dimanapun di tokopedia sekarang beli koleksi majalah fashion pria online

yomamen majalah online pria indonesia - Aug 30 2023

web yomamen com adalah majalah online khusus pria indonesia lahir dari keinginan untuk menyediakan tulisan khas laki laki indonesia membahas sekaligus mengkritisi urusan

jual majalah dewasa pria model terbaru kekinian blibli com - Jan 11 2022

web jul 29 2023 majalah pria casual 2 7 downloaded from uniport edu ng on july 29 2023 by guest exercises and exhilarating stories of great selling techniques in action

majalah pria dewasa bukalapak - Aug 18 2022

web majalah pria bogor indonesia 9 055 likes 277 talking about this pusat informasi seputar kaum lelaki