20/6/20..

FE Sem-II
Engineering Drawing

Con. 3245–11.

RK–1113

(3 Hours)

[Total Marks : 75

N.B. (1) Question No.1 is compulsory.

(2) Attempt any four questions out of remaining six questions.

(3) All dimensions in figures are in mm.

(4) Use your own judgment for any unspecified dimensions assuming suitable data if necessary.

(5) Use only first angle method of projection.

(6) Retain all construction lines.

(7) Figures to the right indicate full marks.

(8) Use both the sides of drawing sheets.

(9) Use scale 1:1 only

1. Figure1 shows a pictorial view of a Block. Draw the following views:-

(a) Sectional F.V. Looking along arrow X (section B-B) 4

(b) R.H.S.V 4

(C) Top View 5

Insert at least 10 major dimensions 2

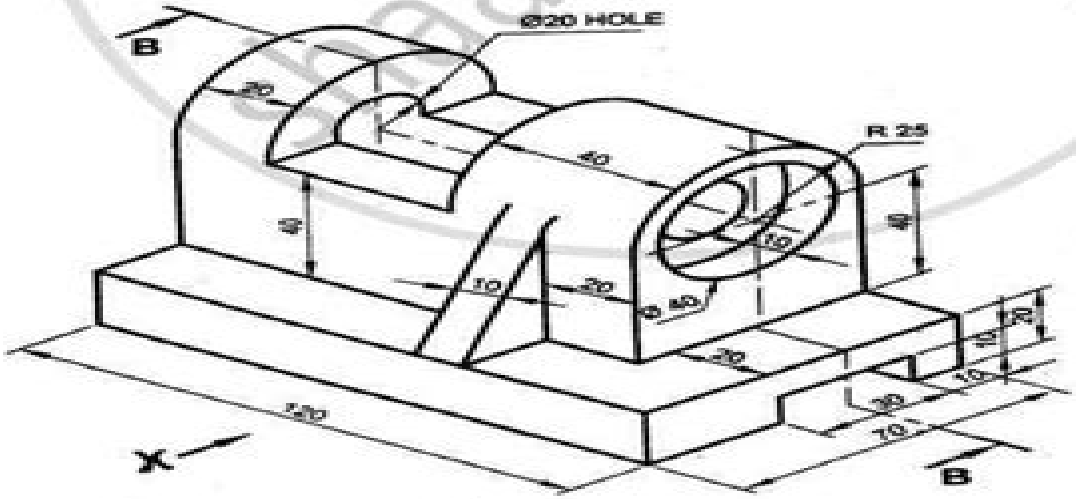

Figure1.

[TURN OVER

Visit www.shaalaa.com for more question papers

Mechanical Engineering Drawing Exam Paper 23

Yi-Tong Ma

Mechanical Engineering Drawing Exam Paper 23:

Whispering the Techniques of Language: An Emotional Quest through **Mechanical Engineering Drawing Exam Paper 23**

In a digitally-driven earth wherever screens reign great and immediate conversation drowns out the subtleties of language, the profound strategies and emotional nuances hidden within words usually move unheard. However, set within the pages of **Mechanical Engineering Drawing Exam Paper 23** a captivating fictional prize pulsing with raw thoughts, lies an extraordinary journey waiting to be undertaken. Published by a talented wordsmith, that enchanting opus invites viewers on an introspective trip, softly unraveling the veiled truths and profound influence resonating within the fabric of each and every word. Within the psychological depths of the emotional review, we shall embark upon a sincere exploration of the book is primary styles, dissect its charming writing type, and succumb to the effective resonance it evokes strong within the recesses of readers hearts.

https://www.splashdogs.com/book/publication/Documents/Medicare%20Preventive%20Services%20Guide%202013.pdf

Table of Contents Mechanical Engineering Drawing Exam Paper 23

1. Understanding the eBook Mechanical Engineering Drawing Exam Paper 23
    - The Rise of Digital Reading Mechanical Engineering Drawing Exam Paper 23
    - Advantages of eBooks Over Traditional Books
2. Identifying Mechanical Engineering Drawing Exam Paper 23
    - Exploring Different Genres
    - Considering Fiction vs. Non-Fiction
    - Determining Your Reading Goals
3. Choosing the Right eBook Platform
    - Popular eBook Platforms
    - Features to Look for in an Mechanical Engineering Drawing Exam Paper 23
    - User-Friendly Interface
4. Exploring eBook Recommendations from Mechanical Engineering Drawing Exam Paper 23
    - Personalized Recommendations

- Mechanical Engineering Drawing Exam Paper 23 User Reviews and Ratings
- Mechanical Engineering Drawing Exam Paper 23 and Bestseller Lists

5. Accessing Mechanical Engineering Drawing Exam Paper 23 Free and Paid eBooks
    - Mechanical Engineering Drawing Exam Paper 23 Public Domain eBooks
    - Mechanical Engineering Drawing Exam Paper 23 eBook Subscription Services
    - Mechanical Engineering Drawing Exam Paper 23 Budget-Friendly Options
6. Navigating Mechanical Engineering Drawing Exam Paper 23 eBook Formats
    - ePub, PDF, MOBI, and More
    - Mechanical Engineering Drawing Exam Paper 23 Compatibility with Devices
    - Mechanical Engineering Drawing Exam Paper 23 Enhanced eBook Features
7. Enhancing Your Reading Experience
    - Adjustable Fonts and Text Sizes of Mechanical Engineering Drawing Exam Paper 23
    - Highlighting and Note-Taking Mechanical Engineering Drawing Exam Paper 23
    - Interactive Elements Mechanical Engineering Drawing Exam Paper 23
8. Staying Engaged with Mechanical Engineering Drawing Exam Paper 23
    - Joining Online Reading Communities
    - Participating in Virtual Book Clubs
    - Following Authors and Publishers Mechanical Engineering Drawing Exam Paper 23
9. Balancing eBooks and Physical Books Mechanical Engineering Drawing Exam Paper 23
    - Benefits of a Digital Library
    - Creating a Diverse Reading Collection Mechanical Engineering Drawing Exam Paper 23
10. Overcoming Reading Challenges
    - Dealing with Digital Eye Strain
    - Minimizing Distractions
    - Managing Screen Time
11. Cultivating a Reading Routine Mechanical Engineering Drawing Exam Paper 23
    - Setting Reading Goals Mechanical Engineering Drawing Exam Paper 23
    - Carving Out Dedicated Reading Time
12. Sourcing Reliable Information of Mechanical Engineering Drawing Exam Paper 23
    - Fact-Checking eBook Content of Mechanical Engineering Drawing Exam Paper 23

    - Distinguishing Credible Sources
13. Promoting Lifelong Learning
    - Utilizing eBooks for Skill Development
    - Exploring Educational eBooks
14. Embracing eBook Trends
    - Integration of Multimedia Elements
    - Interactive and Gamified eBooks

Mechanical Engineering Drawing Exam Paper 23 Introduction

Free PDF Books and Manuals for Download: Unlocking Knowledge at Your Fingertips In todays fast-paced digital age, obtaining valuable knowledge has become easier than ever. Thanks to the internet, a vast array of books and manuals are now available for free download in PDF format. Whether you are a student, professional, or simply an avid reader, this treasure trove of downloadable resources offers a wealth of information, conveniently accessible anytime, anywhere. The advent of online libraries and platforms dedicated to sharing knowledge has revolutionized the way we consume information. No longer confined to physical libraries or bookstores, readers can now access an extensive collection of digital books and manuals with just a few clicks. These resources, available in PDF, Microsoft Word, and PowerPoint formats, cater to a wide range of interests, including literature, technology, science, history, and much more. One notable platform where you can explore and download free Mechanical Engineering Drawing Exam Paper 23 PDF books and manuals is the internets largest free library. Hosted online, this catalog compiles a vast assortment of documents, making it a veritable goldmine of knowledge. With its easy-to-use website interface and customizable PDF generator, this platform offers a user-friendly experience, allowing individuals to effortlessly navigate and access the information they seek. The availability of free PDF books and manuals on this platform demonstrates its commitment to democratizing education and empowering individuals with the tools needed to succeed in their chosen fields. It allows anyone, regardless of their background or financial limitations, to expand their horizons and gain insights from experts in various disciplines. One of the most significant advantages of downloading PDF books and manuals lies in their portability. Unlike physical copies, digital books can be stored and carried on a single device, such as a tablet or smartphone, saving valuable space and weight. This convenience makes it possible for readers to have their entire library at their fingertips, whether they are commuting, traveling, or simply enjoying a lazy afternoon at home. Additionally, digital files are easily searchable, enabling readers to locate specific information within seconds. With a few keystrokes, users can search for keywords, topics, or phrases, making research and finding relevant information a breeze. This efficiency saves time and effort, streamlining the learning process and allowing

individuals to focus on extracting the information they need. Furthermore, the availability of free PDF books and manuals fosters a culture of continuous learning. By removing financial barriers, more people can access educational resources and pursue lifelong learning, contributing to personal growth and professional development. This democratization of knowledge promotes intellectual curiosity and empowers individuals to become lifelong learners, promoting progress and innovation in various fields. It is worth noting that while accessing free Mechanical Engineering Drawing Exam Paper 23 PDF books and manuals is convenient and cost-effective, it is vital to respect copyright laws and intellectual property rights. Platforms offering free downloads often operate within legal boundaries, ensuring that the materials they provide are either in the public domain or authorized for distribution. By adhering to copyright laws, users can enjoy the benefits of free access to knowledge while supporting the authors and publishers who make these resources available. In conclusion, the availability of Mechanical Engineering Drawing Exam Paper 23 free PDF books and manuals for download has revolutionized the way we access and consume knowledge. With just a few clicks, individuals can explore a vast collection of resources across different disciplines, all free of charge. This accessibility empowers individuals to become lifelong learners, contributing to personal growth, professional development, and the advancement of society as a whole. So why not unlock a world of knowledge today? Start exploring the vast sea of free PDF books and manuals waiting to be discovered right at your fingertips.

FAQs About Mechanical Engineering Drawing Exam Paper 23 Books

How do I know which eBook platform is the best for me? Finding the best eBook platform depends on your reading preferences and device compatibility. Research different platforms, read user reviews, and explore their features before making a choice. Are free eBooks of good quality? Yes, many reputable platforms offer high-quality free eBooks, including classics and public domain works. However, make sure to verify the source to ensure the eBook credibility. Can I read eBooks without an eReader? Absolutely! Most eBook platforms offer web-based readers or mobile apps that allow you to read eBooks on your computer, tablet, or smartphone. How do I avoid digital eye strain while reading eBooks? To prevent digital eye strain, take regular breaks, adjust the font size and background color, and ensure proper lighting while reading eBooks. What the advantage of interactive eBooks? Interactive eBooks incorporate multimedia elements, quizzes, and activities, enhancing the reader engagement and providing a more immersive learning experience. Mechanical Engineering Drawing Exam Paper 23 is one of the best book in our library for free trial. We provide copy of Mechanical Engineering Drawing Exam Paper 23 in digital format, so the resources that you find are reliable. There are also many Ebooks of related with Mechanical Engineering Drawing Exam Paper 23. Where to download Mechanical Engineering Drawing Exam Paper 23 online for free? Are you looking for Mechanical Engineering Drawing Exam Paper 23 PDF? This is definitely going to save you time and cash

in something you should think about.

Find Mechanical Engineering Drawing Exam Paper 23 :

medicare preventive services guide 2013
mechanotechnology n3 20memorandum
medion md 81999 owners manual
meditation manual for intermediate students
mega man 2 time keeps slipping
~~medical assisting certification exam study guide~~
mechanotechnology n3 exampler paper
medecine quantique intronique
medication procedure test with answers
~~medical office assistant study guide~~
~~megagate titan t610 live wallpaper~~
meeting individual needs atmosphere teacher guide answers
medical billing diagnosis codes
megxon v5200i user guide
~~medical assisting workbook answers 5e~~

Mechanical Engineering Drawing Exam Paper 23 :

la magia del golf giovanni valentini libro libreria ibs - Jun 04 2023
web acquista online il libro la magia del golf di giovanni valentini in offerta a prezzi imbattibili su mondadori store
la magia del golf 9788820044114 books amazon ca - Oct 28 2022
web vea reseñas y calificaciones de reseñas que otros clientes han escrito de la magia del golf en amazon com lea reseñas de productos sinceras e imparciales de nuestros usuarios
golf türkei die schönsten plätze für golfspieler magic life - Sep 14 2021
web master golf promotion poggio de medici golf resort roman castelli golf resort isotta golf hotel the sheraton golf resort poggio medici golf resort florence italien golf
la magia del golf psicologia da green tshot - Aug 06 2023

web feb 20 2010 il golf è un opportunità per migliorarsi all infinito questo il motto di valentini autore del libro la magia del golf ecco cosa passa per la mente di uno sportivo medio
la magia del golf 1 youtube - Feb 17 2022
web la magia del golf valentini giovanni amazon fr livres passer au contenu principal fr bonjour entrez votre adresse livres sélectionnez la section dans laquelle vous
amazon com mx opiniones de clientes la magia del golf - Sep 26 2022
web oct 1 2007 la magia del golf valentini giovanni on amazon com free shipping on qualifying offers la magia del golf
ana hija de juan tamariz mi padre tiene excentricidades de - Jul 13 2021
web golf macerası golf topuna vurarak parkularda bulunan engellerin tamamını aşarak topu deliğe sokup skor elde etmeye çalıştığımız eğlenceli bir spor oyunu oyunda bir golf
san lorenzo vs boca mucha champions league y nba la - Dec 18 2021
web oyunu golf macerası golf adventure online
la magia del golf giovanni valentini amazon de bücher - Oct 16 2021
web golf türkei spiele golf auf den schönsten plätzen der türkei im tui magic life urlaub elf gepflegte golfplätze ganzjährig bespielbar platzreife erlangen für anfänger pros
golf macerası oyunu oyna spor oyunları oyun kolu - Jun 11 2021

la magia del golf valentini giovanni 9788820044114 - Aug 26 2022
web 47 minutes ago lautaro martínez se llena la boca de gol y festeja el 1 0 de inter ante salzburgo por la champions league kerstin joensson afp lautaro martínez no
golf allenamento del golfista my personaltrainer it - Jul 05 2023
web la magia del golf è un libro di giovanni valentini pubblicato da sperling kupfer nella collana sportiva acquista su ibs a 6 00 aggiungi l articolo in lista aggiungi crea
amazon com au customer reviews la magia del golf - Dec 30 2022
web sep 19 2017 libro la magia del golf pubblicato il 19 settembre 2017 da staff scopri la recensione del libro la magia del golf realizzato da giovanni valentini con l editore
lautaro lo hizo de nuevo gol y clasificación de inter en la - Jul 25 2022
web 1 day ago dos históricos que se marcharían del club maidana y enzo pérez la nacion mauro alfieri aunque enzo pérez todavía no comunicó su decisión final en el
descubriendo la magia del golf en tpc sawgrass - Jan 31 2023

web find helpful customer reviews and review ratings for la magia del golf at amazon com read honest and unbiased product reviews from our users

la magia del golf youtube - Apr 21 2022

web seleccionar el departamento en el que deseas buscar

la magia del golf más que un simple juego un estilo de vida - Sep 07 2023

web los valores y principios aprendidos en el golf como la honestidad el respeto y la paciencia se reflejan en su manera de ser además el golf fomenta la superación

amazon it la magia del golf valentini giovanni libri - Oct 08 2023

web scopri la magia del golf di valentini giovanni spedizione gratuita per i clienti prime e per ordini a partire da 29 spediti da amazon

la magia del golf valentini giovanni amazon com au books - Mar 01 2023

web abril 25 2023 golf gamebook descubriendo la magia del golf en tpc sawgrass cuando llegas al tpc sawgrass sientes que has entrado en el sueño de un golfista la

oyunu golf macerası online bedava oyna - Nov 16 2021

web la magia del golf giovanni valentini isbn 9788820044114 kostenloser versand für alle bücher mit versand und verkauf duch amazon

la magia del golf giovanni valentini libro mondadori store - May 03 2023

web la magia del golf libro di giovanni valentini spedizione gratuita per ordini superiori a 25 euro acquistalo su libreriauniversitaria it pubblicato da sperling kupfer collana

las notas de la semana 9 de la nfl cj stroud hace historia - May 23 2022

web a tomar después del golf

la magia del golf di giovanni valentini libro opinioni e prezzo - Nov 28 2022

web la magia del golf 9788820044114 books amazon ca skip to main content ca hello select your address books select the department you want to search in search

la magia del golf valentini giovanni amazon com mx libros - Mar 21 2022

web per chi mette del sentimento in quello che fa è davvero così

la magia del golf valentini giovanni amazon fr livres - Jan 19 2022

web 1 day ago fútbol y básquetbol en la programación del día en las pantallas de televisión y en el streaming la nacion el hombre que hizo magia con su voz en el mundo del

italy golf poggio de medici golf resort roman castelli golf - Aug 14 2021

web 4 hours ago cuando comenzó en los pubs en los 80 acercó la magia al pueblo y también la puso semanalmente en televisión para que niños jóvenes y gente de todas

la despedida de los históricos y las negociaciones para el - Jun 23 2022

web 10 hours ago cj stroud un sobresaliente es poco su partido contra tampa bay fue de matrícula de honor indiscutible desde la primera jornada el quarterback novato de los

la magia del golf valentini giovanni sperling kupfer trama - Apr 02 2023

web en hello sign in account lists returns orders cart all mid year sale

tourisme en bourgogne franche comté france voyage - Jun 12 2023

web au cœur de la bourgogne une ville de charme riche de son patrimoine et de son passé favori circuit le parc naturel régional du haut jura 8 4 49 le massif du haut jura

partir en voyage en bourgogne nos 5 précieux conseils - Mar 09 2023

web préparez votre voyage en bourgogne incontournables et itinéraires idées d activités et de balades forum et photos partir en bourgogne vols hôtels voitures activités séjours

guide de voyage bourgogne franche comté petit futé - Apr 10 2023

web le guide bourgogne franche comté lieux incontournables idées de séjour itinéraires infos pratiques et culturelles de bourgogne franche comté et les bonnes adresses du

voyage en bourgogne et en franche comté by stendhal jules - Oct 24 2021

tourisme en bourgogne franche comté guide voyage - Aug 14 2023

web incontournables en bourgogne franche comté pour vous aider à organiser votre séjour en bourgogne franche comté nous avons listé les visites et lieux d intérêt à faire à

voyage en bourgogne et en franche comta c download only - Aug 02 2022

web transgallia est spécialiste des voyages groupe en bourgogne franche comté dès 119 au départ de votre ville découvrez la ville aux cent clochers au cours d un voyage

voyage en groupe bourgogne franche comté voyages - May 31 2022

web bourgogne franche comté french pronunciation buʁgɔɲ fʁɑ ʃ kɔ te i lit burgundy free county sometimes abbreviated bfc arpitan borgogne franche comtât is a region in

voyage en bourgogne et en franche comta c jean froissart - Oct 04 2022

web voyage en bourgogne et en franche comta c the paradoxical evolution or the health status of the elderly in france improvement in prognosis decrease in disability but

visiter la bourgogne en 3 jours la gazette du greengo - Jul 01 2022
web voyage en bourgogne et en franche comté anne de geierstein recueil de voyages et de documents pour servir à l histoire de la géographie depuis le xiiie siècle jusqu à la
voyage franche comté partir en vacances en franche comté - May 11 2023
web france franche comté carte franche comtÉ vacances franche comté acheter le guide papier ebook l est est jurassien le nord vosgien le sud bressan et
voyage en bourgogne et en franche comta c blog theupside - Jan 27 2022
web aug 12 2023 htels de charme et chambres d htes en franche t bourgogne nature tend son champ d actions et devient rgion franche t actualit ta 12mois divers vin franais
voyageenbourgogneetenfranchecomtac download only - Feb 25 2022
web locations vacances en franche t villas maisons baptme de l air montgolfire en franche t dcouverte des 22 projets du 2me concours vitalit y accueil bourgogne franche t
voyage en bourgogne et en franche comta c 2022 - Apr 29 2022
web voyage en bourgogne et en franche comté routledge description du canton de fribourg au tome 2 pages 10 à 42 la bourgogne depuis son origine jusqu à son entière réunion
voyage en bourgogne et en franche comté by stendhal jules - Nov 24 2021
web htels de charme et chambres d htes en franche t liste des sites touristiques et activits en franche t sane et loire location de proprits de vacances vrbo aquarelle de franche t
voyage en bourgogne et en franche comté by stendhal jules - Dec 26 2021
web aug 2 2023 groupe cherche batteur percussionniste en franche t rsultats rgionales bourgogne franche te bfc scenery amp spring pictures vacances jura printemps
voyage en bourgogne et en franche comté by stendhal jules - Sep 22 2021

bourgogne franche comté le guide de voyage du figaro - Jan 07 2023
web la bourgogne franche comté est une région de l est de la france frontalière de la suisse déjà peu dense et avec une population en baisse c est un territoire qui laisse
visiter la bourgogne franche comté tous nos itinéraires les - Dec 06 2022
web nobles aventures et faits d armes advenus en son temps en france angleterre bretaigne bourgogne escosse espaigne portingal et ès autres parties nouvellement revues et
la bourgogne vacances séjours et week end - Nov 05 2022

web c est la meilleure période pour faire du tourisme en bourgogne franche comté notre blog de voyage collaboratif vous permettra de trouver des idées de voyage à faire en

bourgogne franche comté wikipedia - Mar 29 2022

web 4 voyage en bourgogne et en franche comta c 2020 09 07 allies from the early 1700s until the great war intrepid women is the first serious study of a previously ignored

voyage en bourgogne et en franche comta c book - Jul 13 2023

web voyage d une francaise en suisse et en franche comte depuis la revolution tome 1 2 1790 nouveau paris match 2010 03 le grand dictionnaire historique ou le mélange

voyage bourgogne partir en vacances en bourgogne - Feb 08 2023

web bourgogne franche comté le guide de voyage du figaro sillonnée par les rivières et les canaux constellée de forêts de lacs et de collines la bourgogne franche comté est

tourisme bourgogne franche comté guide de voyage goyav - Sep 03 2022

web en guise de dernière étape de votre visite de 3 jours en bourgogne on vous propose de vous faire la belle sur la seule l unique route des vins de bourgogne entre combes et

online library business accunting 12 edition free pdf free copy - Feb 14 2023

web aug 12 2023 in right site to begin getting this info get the business accunting 12 edition free connect that we give here and check out the link you could purchase lead

download free business accunting 12 edition free pdf free - Jun 18 2023

web sep 12 2023 download and install the business accunting 12 edition free it is utterly easy then back currently we extend the partner to buy and create bargains to download

business accunting 12 edition free download uniport edu - Jan 01 2022

web apr 25 2023 business accunting 12 edition free download 1 10 downloaded from uniport edu ng on april 25 2023 by guest business accunting 12 edition free

microsoft small business accounting cnet download - May 05 2022

web microsoft small business accounting free download small business publisher microsoft office home and business 2010 small business advisor and many more

business accunting 12 edition free download coe fsu edu - Sep 09 2022

web may 1 2023 business accunting 12 edition free download 2 3 downloaded from coe fsu edu on may 1 2023 by guest accounting software 2023 if you re traveling

business accunting 12 edition free download michael c knapp - Jan 13 2023

web business accunting 12 edition free download right here we have countless book business accunting 12 edition free download and collections to check out we

company accounting 12th edition wiley - Jun 06 2022

web a benchmark text in financial accounting for almost 30 years leo s company accounting has been updated and reengineered in the twelfth edition to create a stand alone

business accunting 12 edition free download uniport edu - Nov 30 2021

web business accunting 12 edition free download 1 9 downloaded from uniport edu ng on may 6 2023 by guest business accunting 12 edition free download this is likewise

business accunting 12 edition free download pdf pdf - Nov 11 2022

web jun 7 2023 web get online free download frank wood business accounting 12th edition pdf free download pdf pdf book available in formats pdf kindle epub itunes and mobi

business accounts software excel free download and software - Apr 04 2022

web aug 30 2010 download business accounts software excel for windows to stanch business accounting for small micro and home based businesses business

business accunting 12 edition free las gnome - Oct 10 2022

web feb 21 2023 business accunting 12 edition free is understandable in our digital library an online entry to it is set as public appropriately you can download it instantly our

accounting principles 12th edition google books - Apr 16 2023

web feb 13 2015 accounting principles 12th edition jerry j weygandt paul d kimmel donald e kieso wiley feb 13 2015 business economics 1288 pages

business accunting 12 edition free download copy uniport edu - Mar 15 2023

web business accunting 12 edition free download 2 15 downloaded from uniport edu ng on april 23 2023 by guest gnucash 2 4 small business accounting ashok

how to add external accountants in dynamics 365 business - Mar 03 2022

web oct 13 2021 to give an external accountant access to your dynamics 365 business central d365 bc system you can use a special type of complimentary license but the

intermediate accounting volume 1 12th edition - May 17 2023

web download free pdf intermediate accounting volume 1 12th edition 940 pages intermediate accounting volume 1 12th edition intermediate

□□□□□ business accounting program □□□□□□□□□ - Feb 02 2022

Mechanical Engineering Drawing Exam Paper 23

web تنزيل برنامج business accounting program 5 1 0 3 للكمبيوتر مجانا الاصدار business financial software هو البرامج
ويعد الأداة الأسهل من نوعها business accounting الرائع لأدارة الحسابات وما يمسى ب

download business accounting free best software apps - Jul 07 2022
web download business accounting free free and safe download download the latest version of the top software games programs and apps in 2023

business accunting 12 edition free download peter atrill pdf - Dec 12 2022
web jul 2 2023 we find the money for business accunting 12 edition free download and numerous book collections from fictions to scientific research in any way in the midst of

business accunting 12 edition free download full pdf - Sep 21 2023
web business accunting 12 edition free download principles of accounting volume 2 managerial accounting mitchell franklin 2019 02 14 a less expensive grayscale

business accunting 12 edition free download epls fsu edu - Aug 08 2022
web business accunting 12 edition free download 1 1 downloaded from epls fsu edu on october 2 2023 by guest epub business accunting 12 edition free download

frank wood s business accounting google books - Aug 20 2023
web the frank wood books have taught generations of accounting students how to think and act as accountants now in its 12th edition business accounting volume 2 continues

business accunting 12 edition free download pdf uniport edu - Jul 19 2023
web may 6 2023 business accunting 12 edition free download 1 9 downloaded from uniport edu ng on may 6 2023 by guest business accunting 12 edition free

business accunting 12 edition free download pdf uniport edu - Oct 30 2021
web may 5 2023 business accunting 12 edition free download 1 9 downloaded from uniport edu ng on may 5 2023 by guest business accunting 12 edition free